**PASTILLE**
BRACKET SHORT
W242BR1

Wall mounted luminaire made from biopolyamide; ABS reflector and polycarbonate diffuser; surface Traffic white; RAL 9016; with COB (Chip on Board) technology for maximum efficiency; integrated dimmer switch; light colour 2700 K; ≤ 3 SDCM (initial MacAdam); CRI ≥ 98; degree of protection IP20; Class 2; incl. 2000mm black cable plug; light source replaceable by Wastberg+ or by a professional with explicit authorization; control gear replaceable by end-user;

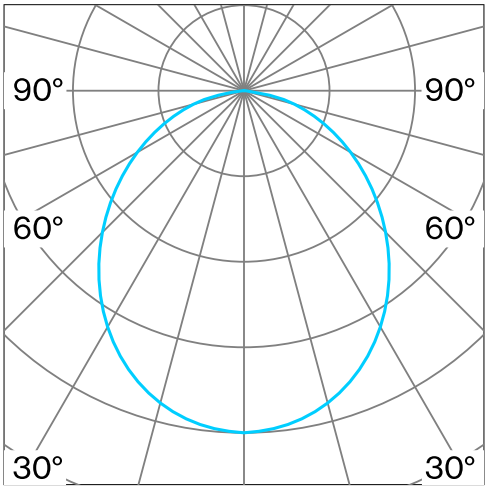


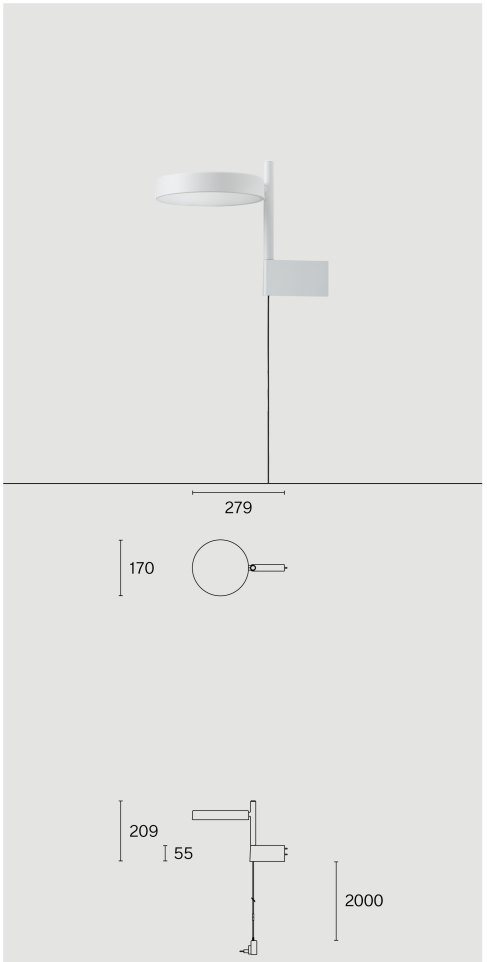


## TECHNICAL INFORMATION

| | |
|---|---|
| **Physical** | |
| **Material** | Lamp Body: Aluminium |
| **IP Rating** | IP20 |
| **Safety Class** | Class II |
| **LED** | |
| **Colour Rendering Index** | CRI ≥ 98 |
| **Lumen Maintenance** | L80 / 50000h |
| **Macadam Ellipse** | ≤ 3 SDCM (initial MacAdam) |

More technical information online

wastberg.com/en/products/pastille-bracket-short-w242br1

## ARTICLE-SPECIFIC INFORMATION

| | |
|---|---|
| **Mounting** | Wall |
| **Luminous Flux** | 472 lm |
| **Colour Temperature** | 2700 K |
| **Optic** | Opal |
| **Control** | Integrated dimmer switch |
| **Voltage** | 100 - 240 V |
| **Power** | 7.4 W |
| **Weight** | 0.6 kg |

| | |
|---|---|
| **Colour / Finish** | **Art. No. / EAN code** |
| Traffic white | **242BR10227** / 7330492011875 |

**PASTILLE**
BRACKET SHORT
W242BR1

Wastberg AB
T +46 10 16 15 010
info@wastberg.com
wastberg.com

The technical data represent rated values for an ambient temperature of 25°C. The data values for the luminous flux are initially subject to a tolerance of +/- 10%, those for the electrical connected load are initially subject to a tolerance of +/- 10%, and those for the colour temperature are initially subject to a tolerance of +/- 150 K. No liability is assumed for typographical or printing errors. The applicable General Terms & Conditions apply.