WINKEL
BASE
W227B

Free standing table luminaire made from aluminium; surface Traffic white; RAL 9016; acrylic diffuser and polyamide reflector & glare shade; with COB (Chip on Board) technology for maximum efficiency; integrated dimmer switch (timer 8h); light colour 3000 K; ≤ 3 SDCM (initial MacAdam); CRI ≥ 98; degree of protection IP20; Class 2; incl. cable 2000mm and plug; light source replaceable by Wastberg+ or by a professional with explicit authorization; control gear replaceable by end-user;

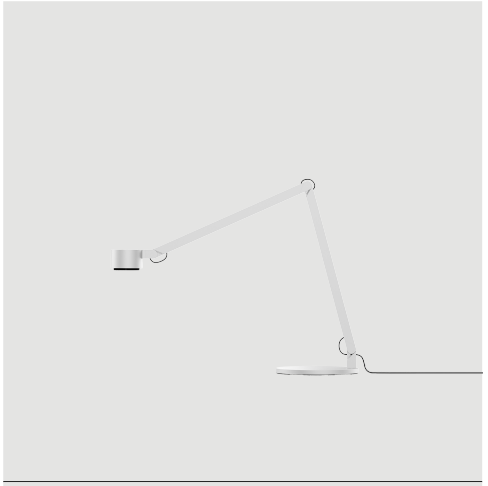

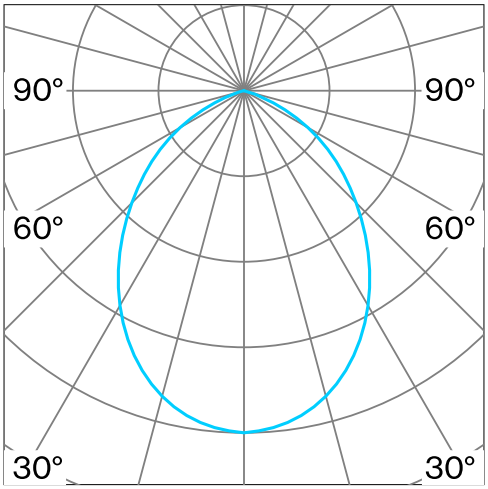

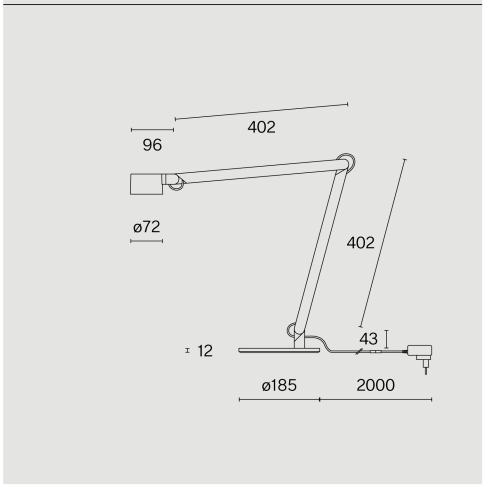

TECHNICAL INFORMATION

Physical	
Material	Lamp Body: Aluminium
IP Rating	IP20
Safety Class	Class II
LED	
Colour Rendering Index	CRI ≥ 98
Lumen Maintenance	L85 / 50000 h
Macadam Ellipse	≤ 3 SDCM (initial MacAdam)

More technical information online

wastberg.com/en/products/winkel-base-w227b

ARTICLE-SPECIFIC INFORMATION

Mounting	Table
Luminous Flux	517 lm
Colour Temperature	3000 K
Control	Integrated dimmer switch (timer 8h)
Voltage	100 - 240 V
Power	8.8 W
Weight	4 kg

Colour / Finish	**Art. No. / EAN code**
Traffic white	**227B20230** / 7330492000701

WINKEL
BASE
W227B

Wastberg AB
T +46 10 16 15 010
info@wastberg.com
wastberg.com

The technical data represent rated values for an ambient temperature of 25°C. The data values for the luminous flux are initially subject to a tolerance of +/- 10%, those for the electrical connected load are initially subject to a tolerance of +/- 10%, and those for the colour temperature are initially subject to a tolerance of +/- 150 K. No liability is assumed for typographical or printing errors. The applicable General Terms & Conditions apply.